Bluebell

BC Series Modular Fibre Optic Interface System

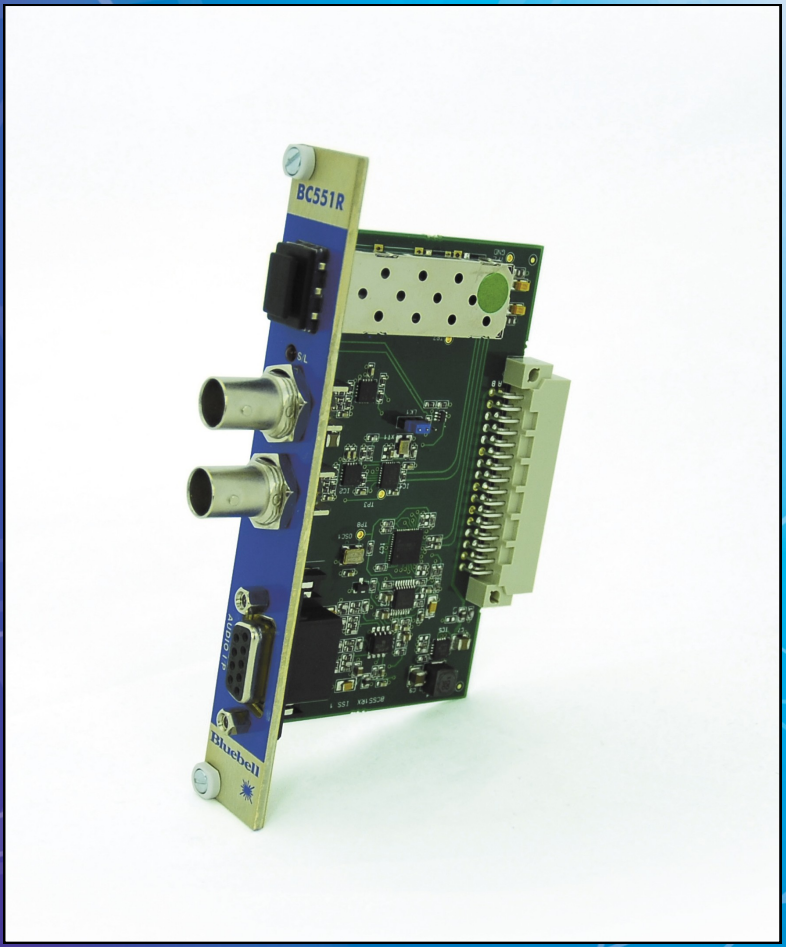

BC551R Optical to Electrical Receiver

3G-SDI, Audio

The BC551R is a receiver for the conversion of an optical signal into electrical 3G-SDI, HD-SDI, SD-SDI and ASI. The incoming optical signal is fed to a trans-impedance and limiting amplifier before being electrically reclocked on the output.

A reverse path for an audio or control data signal is carried on a second fibre making the BC551 perfect for adding cost effective fibre I/O to compact remote camera systems.

The BC551R is available in multimode, singlemode, WDM and CWDM variants to suit any fibre application.

The BC551R occupies a single slot in the BC100-3RU 19" rack-mounting frame which can hold up to 15 single slot cards. This dual functionality allows up to 30 channels of video to be transmitted or received from a single 3RU frame.
Signal and card monitoring is achieved through SNMP monitoring in the BM102 network card. Alternatively GP-Output alarms can be triggered via the BM100 module.

For stand alone applications the BC551R can be housed in an individual rugged enclosure

www.bluebell.tv

E&OE May 2013

BC551R Optical to Electrical Receiver

3G-SDI, Audio

Schematic Diagram BC551R

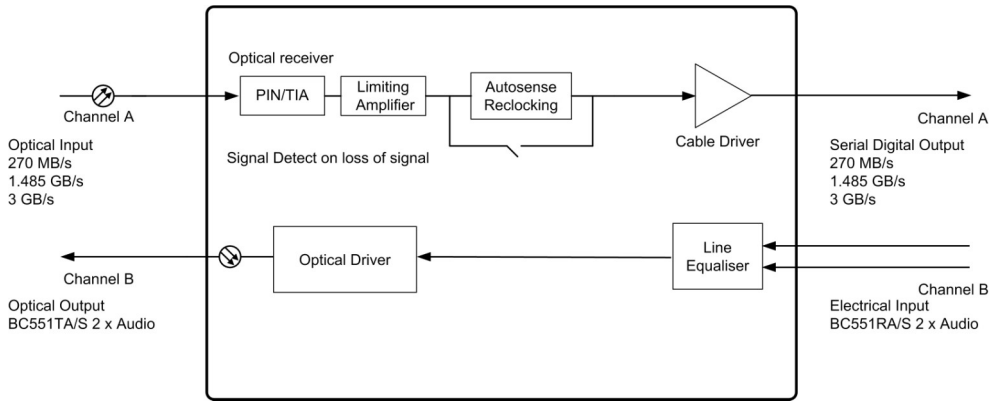

Rear Panel

Specifications for each channel

Optical Input/Output

Connector	1 x female LC as standard per channel See Ordering Information
Wavelength	1270-1610 nm See Ordering Information for multimode and singlemode variants
Sensitivity	> -25.0 dBm @ 3 Gb/s > -25.5 dBm @ 1.485 Mb/s > -26.0 dBm @ 270 Mb/s
Max I/P power	> -1 dBm
Data rate	50 Mb/s to 3 Gb/s

Electrical Output

Standards	SMPTE 424M, SMPTE 292M, SMPTE 259M, SMPTE297M, DVB-ASI Automatic rate selection for 3G-SDI, HD-SDI and SD-SDI data rates.
Connector	1 x 75 Ohm BNC per IEC 60169-8 Amendment 2 per channel
Return Loss	> 15 dB @ 1.485 Gb/s
Polarity	1 x Non inverting, 1 x inverting output
Signal Level	800 mV +/- 10%
DC Offset	0 +/- 0.5 V
Jitter	<0.15 UI line equalised
Format	Reclocked Please note that the factory default unless specified is for units to be supplied in reclocking mode. Non-reclocking settings are accessed via module pcb.

Audio Input

Connector	9-way D connector,
Impedance	86 kOhms
Bandwidth	20 Hz to 20 kHz +/- 0.25 dB
System Gain	0 dB, nominal +/- 0.5dB
Format	Input level +9 dBu Maximum Ref 1 mW into 600 Ohm
Number	2 x Balanced Line Level Analogue Audio
Noise ref	< -90 dB p-p weighted full scale

General module specifications

Length	92 mm
Width	64 mm
Height	30 mm
Excluding connectors	
Weight	100 g
Operating Temp	-30 to +70 ^{0}C
Power	2 W
Voltage	4.5 to 17 V dc
Signal detect	LED on for loss of signal

Conformance

EMI/RFI	Complies with 89/336/EEC
Electrical	Complies with EN 61000-6-1, EN61000-6-2
Laser Safety	Complies with Class 1 laser product 24 CFR 1040.10 & 1040.11
RoHS	Complies with Directive 2002/95/EC

Ordering Information

BC551AR/S	Singlemode 3G/SDI, HD/SDI Fibre Optic Receiver Module, Auto-Sensing for SDI, ASI, HD/SDI and 3G/SDI (1310nm). With reverse audio channel on second fibre.

Universal Chassis and Power Supplies

BC100-3RU	19" 3RU Chassis for up to 15 BCxxx Cards with optional Network Monitoring and facility for Dual Redundant Power Supplies (not supplied).
BM102	Network Monitoring Card with Ethernet connection for Slot-16
PS65	90-250VAC Power Supply for BC100-3RU or BB100-3RU Chassis
BC160	19" 1RU Chassis for up to 6 BCxxx Cards. Includes Dual Redundant Power Supplies. Optional Network Monitoring.

Bluebell Opticom Limited
Unit 2 The Quadrant Howarth Road Maidenhead Berks SL6 1AP
Tel: +44 (0) 1628 510055 Fax: +44 (0)1628 510057
Email: sales@bluebell.tv Website: www.bluebell.tv

RoHS Compliant Directive 2005/95/EC